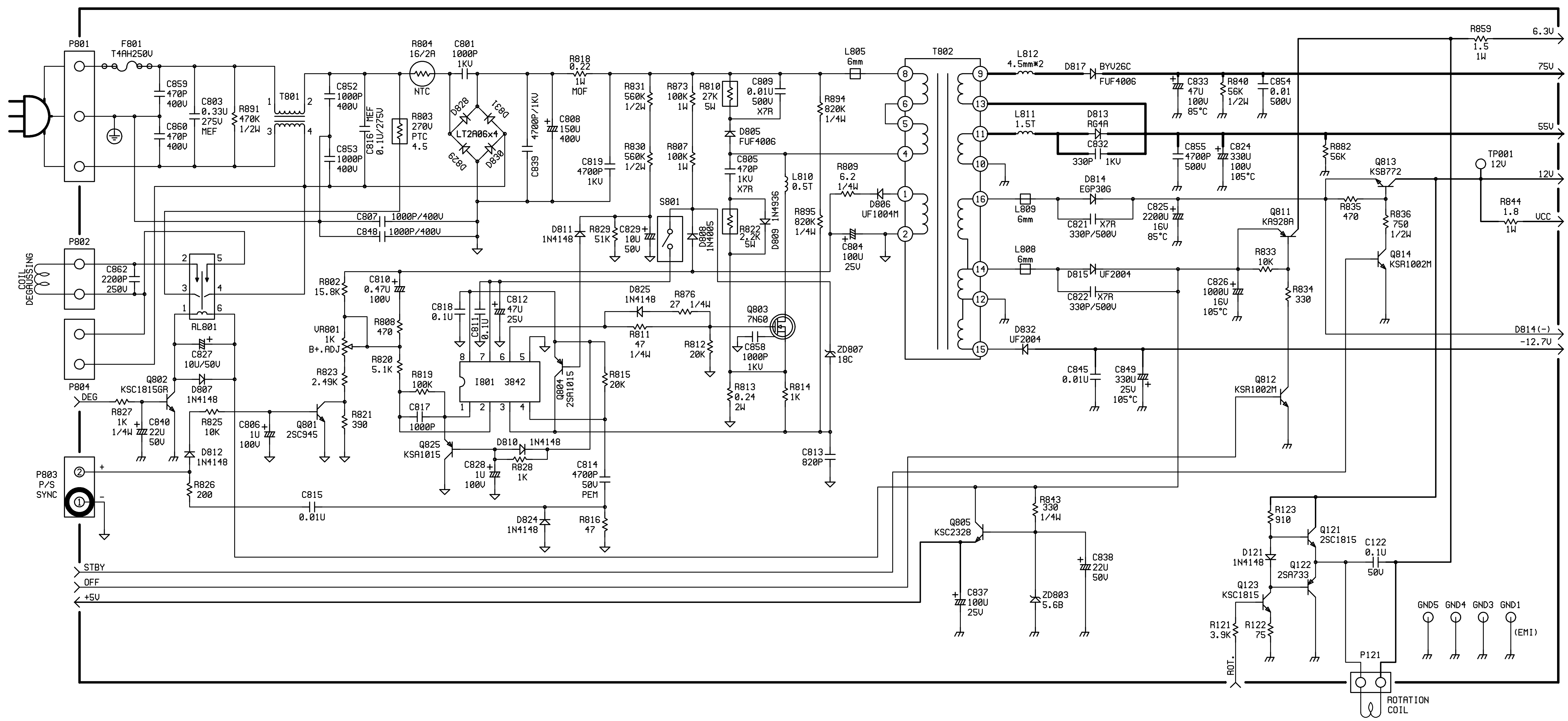

P801
F801 T4AH250V
C859 470P 400V
C860 470P 400V
C803 0.33U 275V MEF
R891 470K 1/2W
T801
C852 1000P 400V
C853 1000P 400V
C816 MEF 0.1U/275V
R803 270V PTC 4.5
R804 16/2A NTC
C801 1000P 1KV
LT2A06x4
D828 D829 D830 D831
C839 4700P/1KV
C808 150U 400V
R818 0.22 1W MOF
C819 4700P 1KV
C807 1000P/400V
C848 1000P/400V
R831 560K 1/2W
R830 560K 1/2W
R873 100K 1W
R807 100K 1W
R810 27K 5W
C809 0.01U 500V X7R
D805 FUF4006
C805 470P 1KV X7R
R822 2.2K 5W
D809 1N4936
L810 0.5T
R894 820K 1/4W
R895 820K 1/4W
L805 6mm
T802
R809 6.2 1/4W
D806 UF1004M
C804 100U 25V
S801
D808 1N4005
C829 10U 50V
R829 51K
D811 1N4148
P802
COIL DEGAUSSING
C862 2200P 250V
RL801
C827 10U/50V
D807 1N4148
P804
DEG
Q802 KSC1815GR
R827 1K 1/4W
C840 22U 50V
R825 10K
D812 1N4148
R826 200
P803 P/S SYNC
C806 1U 100V
Q801 2SC945
R823 2.49K
R821 390
R802 15.8K
VR801 1K B+.ADJ
C810 0.47U 100V
R808 470
R820 5.1K
R819 100K
C817 1000P
C818 0.1U
C811 0.1U
C812 47U 25V
I801 3842
Q804 2SA1015
Q825 KSA1015
D810 1N4148
C828 1U 100V
R828 1K
C815 0.01U
D824 1N4148
R816 47
C814 4700P 50V PEM
R815 20K
D825 1N4148
R876 27 1/4W
R811 47 1/4W
R812 20K
Q803 7N60
C858 1000P 1KV
R813 0.24 2W
R814 1K
ZD807 18C
C813 820P
STBY
OFF
+5V
Q805 KSC2328
R843 330 1/4W
C837 100U 25V
ZD803 5.6B
C838 22U 50V
L812 4.5mm*2
D817 BYV26C FUF4006
C833 47U 100V 85°C
R840 56K 1/2W
C854 0.01 500V
L811 1.5T
D813 RG4A
C832 330P 1KV
C855 4700P 500V
C824 330U 100V 105°C
R882 56K
Q813 KSB772
TP001 12V
L809 6mm
D814 EGP30G
C821 X7R 330P/500V
C825 2200U 16V 85°C
Q811 KA928A
R835 470
R836 750 1/2W
R844 1.8 1W
Q814 KSR1002M
L808 6mm
D815 UF2004
C822 X7R 330P/500V
C826 1000U 16V 105°C
R833 10K
R834 330
D832 UF2004
C845 0.01U
C849 330U 25V 105°C
Q812 KSR1002M
R859 1.5 1W
6.3V
75V
55V
12V
VCC
D814(-)
-12.7V
R123 910
Q121 2SC1815
C122 0.1U 50V
D121 1N4148
Q122 2SA733
Q123 KSC1815
R121 3.9K
R122 75
ROT.
P121
ROTATION COIL
GND5 GND4 GND3 GND1
(EMI)