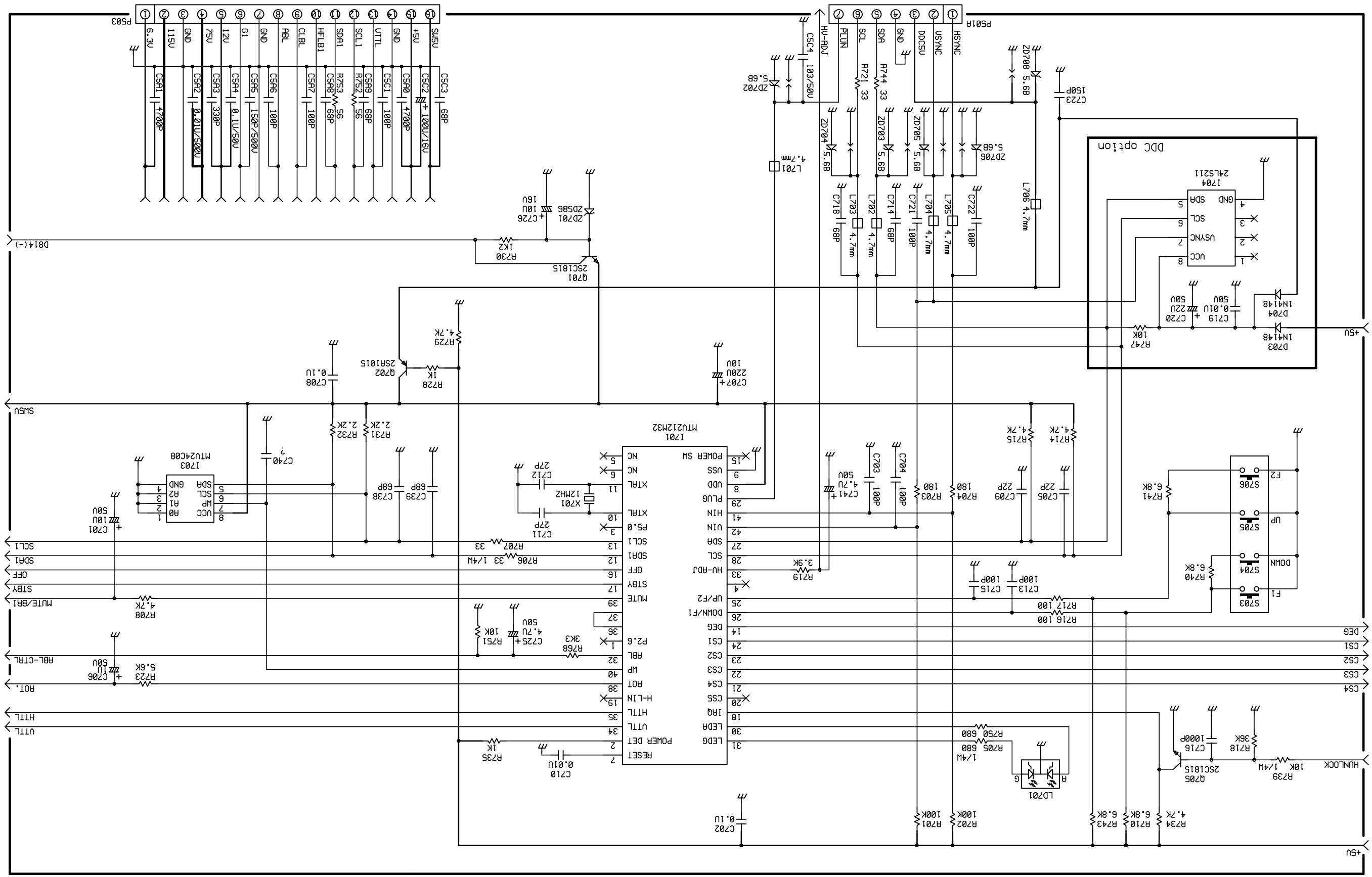
P501A
HSYNC
USYNC
DDC5V
GND
SDA
SCL
SCL
PLUN
HV-ADJ
P503
6.3V
115V
GND
75V
12V
G1
GND
ABL
CLBL
HFLB1
SDA1
SCL1
VTTL
GND
+5V
SW5V
DDC option
I704
24LS211
VCC
USYNC
SCL
SDA
GND
D703
1N4148
D704
1N4148
C719
0.01U
50U
C720
220U
50U
R747
10K
+5U
I701
MTU212M32
POWER SW
VSS
VDD
PLUG
HIN
VIN
SDA
SCL
HV-ADJ
UP/F2
DOWN/F1
DEG
CS1
CS2
CS3
CS4
CS5
IRQ
LEDA
LEDG
POWER DET
RESET
VTTL
HTTL
H-LIN
ROT
WP
ABL
P2.6
MUTE
STBY
OFF
SDA1
SCL1
P5.0
SCL1
SDA1
OFF
STBY
MUTE
XTAL
XTAL
NC
NC
I703
MTU24C08
VCC
WP
SCL
SDA
A0
A1
A2
GND
SW5V
SW5U
ROT.
ABL-CTRL
MUTE/BRI
STBY
OFF
SDA1
SCL1
VTTL
HTTL
HUNLOCK
DEG
CS1
CS2
CS3
CS4
DOWN
UP
F1
F2
S703
S704
S705
S706
LD701
Q705
2SC1815
Q701
2SC1815
Q702
2SA1015
D814(-)
+5U