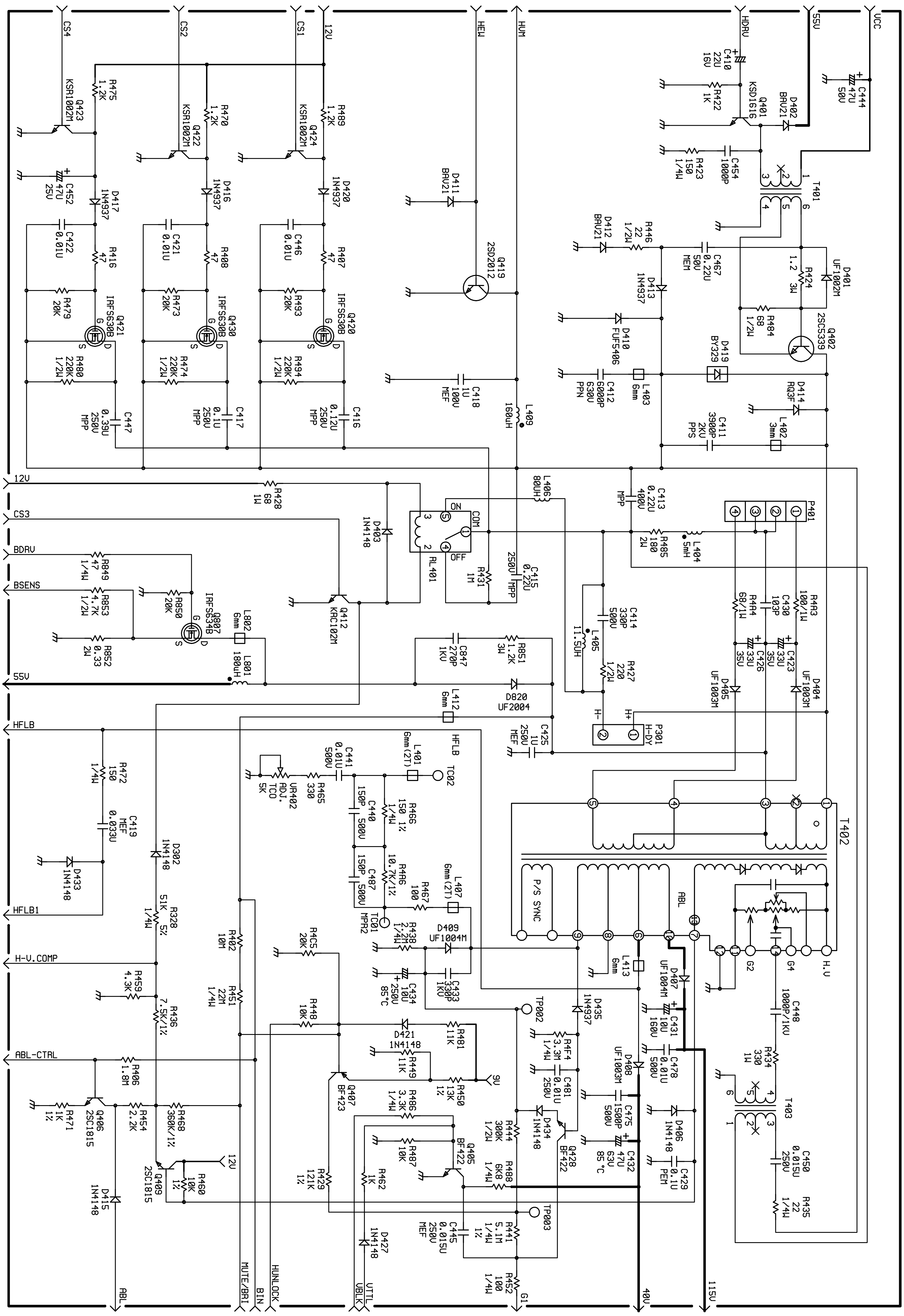
CS4
CS2
CS1
12V
HEW
HVM
HDRV
55V
VCC
R475 1.2K
Q423 KSR1002M
C452 47U 25V
D417 1N4937
C422 0.01U
R416 47
R479 20K
Q421 IRFS630B
R480 220K 1/2W
C447 0.39U 250V MPP
R470 1.2K
Q422 KSR1002M
D416 1N4937
C421 0.01U
R408 47
R473 20K
Q430 IRFS630B
R474 220K 1/2W
C417 0.1U 250V MPP
R489 1.2K
Q424 KSR1002M
D420 1N4937
C446 0.01U
R407 47
R493 20K
Q420 IRFS630B
R494 220K 1/2W
C416 0.12U 250V MPP
D411 BAV21
Q419 2SD2012
C418 1U 100V MEF
L409 160uH
C410 22U 16V
R422 1K
Q401 KSD1616
D402 BAV21
C444 47U 50V
R423 150 1/4W
C454 1000P
T401
D412 BAV21
R446 22 1/2W
C467 0.22U 50V MEM
D413 1N4937
D410 FUF5406
C412 6000P 630V PPN
L403 6mm
D419 BY329
R424 1.2 3W
D401 UF1002M
R484 68 1/2W
Q402 2SC5339
D414 RQ3F
C411 3900P 2KV PPS
L402 3mm
12V
R428 68 1W
CS3
BDRV
R849 47 1/4W
BSENS
R853 4.7K 1/2W
R850 20K
Q807 IRFS634B
R852 0.33 2W
L802 6mm
L801 180uH
55V
D403 1N4148
Q412 KRC102M
RL401
ON
OFF
COM
R431 1M
C415 0.22U 250V MPP
L406 80UH
C413 0.22U 400V MPP
R485 180 2W
L404 5mH
P401
C414 330P 500V
L405 11.5UH
R427 220 1/2W
C847 270P 1KV
R851 1.2K 3W
D820 UF2004
L412 6mm
C425 1U 250V MEF
P301 H-DY
H+
H-
R4A3 100/1W
R4A4 68/1W
C430 103P
C423 33U 35V
C426 33U 35V
D404 UF1003M
D405 UF1003M
HFLB
R472 150 1/4W
C419 MEF 0.033U
D433 1N4148
HFLB1
D302 1N4148
R328 51K 5% 1/4W
H-V.COMP
R459 4.3K
R436 7.5K/1%
ABL-CTRL
R406 1.8M
R471 1K 1%
Q406 2SC1815
R454 2.2K
R468 360K/1%
Q409 2SC1815
R460 10K 1%
12V
D415 1N4148
ABL
R402 10M
R451 22M 1/4W
MUTE/BRI
BIN
HUNLOCK
C441 0.01U 500V
L401 6mm (2T)
TC02
UR402 ADJ. TCO 5K
R465 330
C440 150P 500V
R466 150 1% 1/4W
C487 150P 500V
R4A6 10.7K/1%
R467 100
L407 6mm (2T)
TC01 MPR2
R438 2.2M 1/4W
D409 UF1004M
C434 10U 250V 85°C
C433 330P 1KV
R4C5 20K
R448 10K
D421 1N4148
R481 11K
R449 11K
R450 13K 1%
9V
Q407 BF423
R486 3.3K 1/4W
R487 10K
Q405 BF422
R429 121K 1%
R462 1K
D427 1N4148
C445 0.015U 250V MEF
UBLK
UTTL
T402
P/S SYNC
ABL
G2
G4
H.V
L413 6mm
D407 UF1004M
TP002
D435 1N4937
C431 10U 160V
R4F4 3.3M 1/4W
C478 0.01U 500V
C481 0.01U 250V
D408 UF1003M
C475 1500P 500V
D434 1N4148
Q428 BF422
R444 300K 1/2W
C432 47U 63V 85°C
D406 1N4148
C429 0.1U PEM
R488 6K8 1/4W
TP003
R441 5.1M 1/4W 1%
R452 100 1/4W
G1
40V
115V
C448 1000P/1KV
R434 330 1W
T403
C450 0.015U 250V
R435 22 1/4W